TRUVISION® Verification Chart

CUT OUT CHART

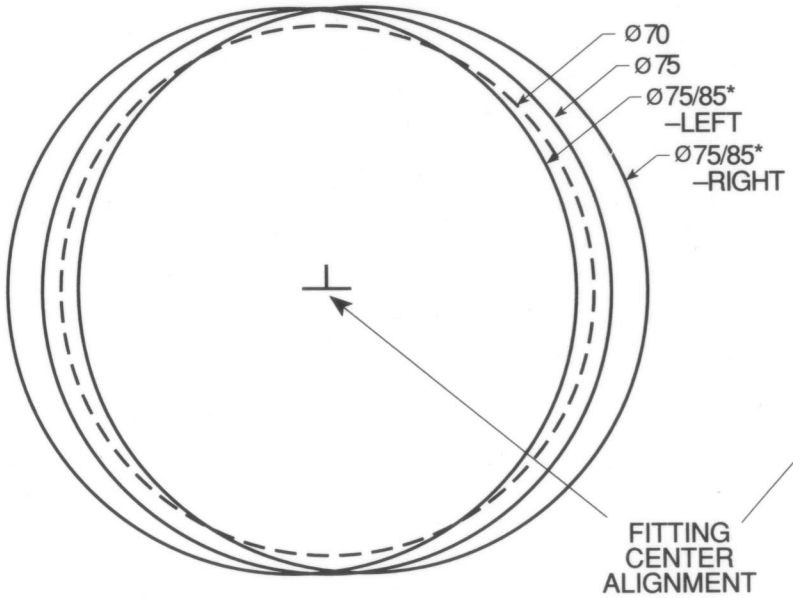

CENTERING CHART

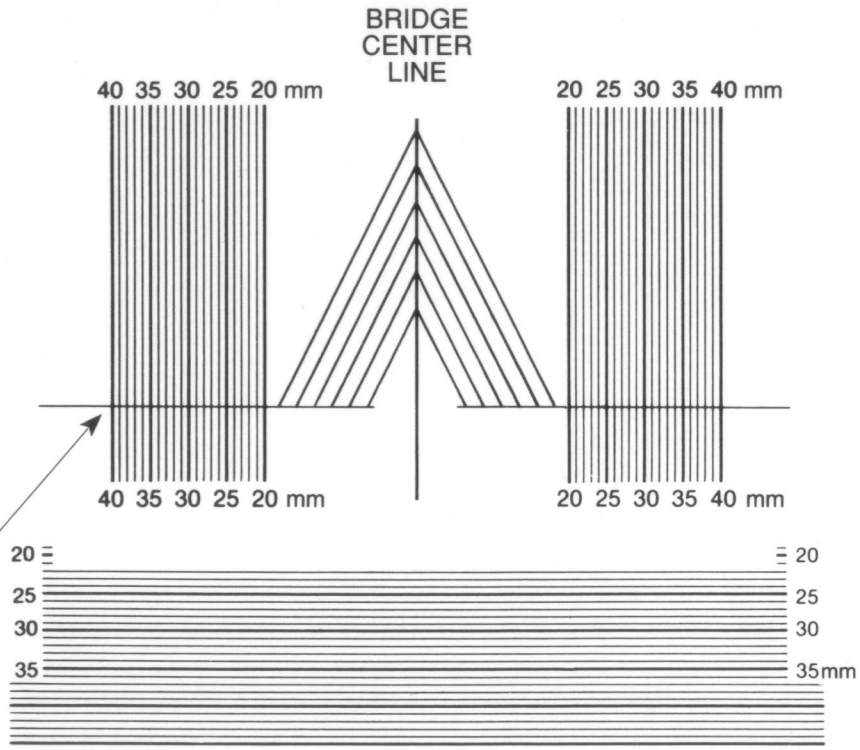

*75mm lens decentered 5mm equals 85mm effective size for cut out.